Waveguide narrowband optical filter using spectral hole burning

Marcel Tschanz
Aleksander Rebane
Urs P. Wild, MEMBER SPIE
Swiss Federal Institute of Technology
Physical Chemistry Laboratory
ETH-Zentrum
Universitätsstrasse 22
CH-8092 Zürich, Switzerland
E-mail: tschanz@phys.chem.ethz.ch

Abstract. We have developed a new integrated narrowband spectral filter, which consists of a planar waveguide covered with a thin polymer film containing molecules, which undergo persistent spectral hole burning at liquid helium temperature. We show that such a device performs as a miniature programmable narrowband spectral filter, with a transmission bandwidth less than 1 GHz. In such a filter the frequency resolution is limited by the width of the homogeneous zero-phonon lines of the chromophore molecules, and not by the geometrical dimensions of the device. Experimental measurements in the time domain using a picosecond dye laser, and in the frequency domain using a single-mode diode laser, are presented.

Subject terms: integrated optics; waveguide filter; spectral hole burning; photon echo.

Optical Engineering 34(7), 1936–1940 (July 1995).

Miniature spectral filters, which can be integrated in optical waveguides, have a variety of potential applications for frequency-multiplexed optical data transmission and processing. Previously, integrated channel-dropping filters[1,2] and tunable interferometers[3] on planar waveguides have been demonstrated to provide a selection bandwidth of about 1.0 to 0.1 Å in the optical region, which corresponds to tens of gigahertz. However, to select efficiently between a large number of different frequency channels, a selection bandwidth of less than 1 GHz is desired. Unfortunately, the performance of passive devices based upon interference and diffraction of light have the tendency to deteriorate as the dimensions of the filter become smaller. This limits the practically achievable frequency selectivity and contrast of integrated optical filters.[1,3]

An alternative approach to spectral filtering is to use the phenomena of spectral hole burning (SHB).[4–7] The special property of SHB materials is that they are able to transmit light at one frequency, while still strongly absorbing light at all other neighboring frequencies. This wavelength selectivity occurs because at low temperatures the inhomogeneous absorption spectrum of molecules (or ions) in dielectric materials, such as polymers and crystals, comprises homogeneous zero-phonon lines (ZPLs) that are much narrower than the overall absorption band of the ensemble of chromophores. If the chromophore molecules can be photochemically switched between two or more states with largely different absorption spectra, then it is possible to bleach out a narrow portion of the inhomogeneous absorption band by illumination with an intense monochromatic laser. The narrow dip or "hole" in the absorption spectrum can be then used as a narrowband filter,[4,8] for holographic storage[6] and molecular computing,[7] or for time-domain holography[9] and subpicosecond pulse shaping.[10]

The zero-phonon line is especially narrow if the material is cryogenically cooled. At liquid helium temperatures, spectral holes narrower than 0.1–1 GHz are typical.[4] Because the frequency selectivity is an intrinsic property of the material, the achievable contrast and the bandwidth of a filter do not critically depend upon the geometric dimensions of the device. It is important, however, that the concentration of the SHB-active molecules be not high enough to cause broadening of the ZPL due to energy migration between the chromophore molecules (see below).

In this paper we discuss the preparation of a miniature spectral filter that operates using a waveguide with a thin cover layer containing organic dye molecules. This cover layer is deposited on top of a commercial single-mode planar waveguide in such a way that about 10% of the total energy of the guided light propagates in the cover material. Since the absorption in the cover material is substantial, a strong damping of the propagating mode occurs, and no light is transmitted through the waveguide. However, if a narrow hole is burned in the absorption spectrum of the cover SHB material, then at the frequency of the spectral hole the light is no longer strongly absorbed and the mode can propagate.

The experimental procedure consists of two steps. In the first step the absorption of the hole-burning layer is modified by illumination with light at a fixed wavelength. In the second step the transmission of the guided mode is measured by an

Paper SWI-13 received Aug. 29, 1994; revised manuscript received Nov. 28, 1994; accepted for publication Dec. 5, 1994.

in- and outcoupled laser beam with tunable frequency. In the following, three experiments are described. The first experiment uses a synchronously pumped picosecond dye laser to demonstrate that spectral holes can be burned and detected in a waveguide configuration. The spectral width of the burned holes is limited by the spectral width of the laser, which is about a hundred times larger than the homogenous ZPL linewidth. In the second experiment the time response of the waveguide structure is measured using the picosecond dye laser after a specific frequency profile has been burned into the spectrum of the waveguide. Using this technique, it is possible to estimate the homogeneous linewidth of the ZPL of the chromophore molecules, and compare it with previously performed measurements in bulk samples. In the third experiment, holes with linewidths in the subgigahertz range are burned and detected with a cw diode laser.

The schematic structure of the combined SHB-waveguide is shown in Fig. 1. The light is guided predominantly in the 160-nm-thick layer of TiO_2-SiO_2 glass (refractive index of $n_F = 1.8$), which is deposited on top of a glass substrate of a lower refractive index ($n_S = 1.5254$). The guiding layer also contains an embossed 2400-line/mm relief grating, which is used to couple light into the TE0 mode. The waveguide is covered with a thin layer of polymer (polyvinylbutyral, refractive index $n_c \approx 1.7$) containing the SHB-active molecules which interact with the evanescent wave. This additional layer is prepared by dipping the waveguide in a methylenchloride solution containing 4.8×10^{-5} mol/l of chlorin (2,3-dihydroporphyrin) molecules and 25 g/l of polymer. A uniform layer of thickness about 120 nm is formed as the waveguide is slowly withdrawn from the solution and the solvent evaporates. The configuration of the waveguide structure allowed only the TE0 mode to propagate.

The scheme of the experiment is shown in Fig. 2. As a tunable coherent light source we use either a synchronously pumped 76-MHz-repetition-rate picosecond dye laser, which has a line width of 0.4 Å, or a narrowband cw diode laser from Philips (CQL840D), which can be controlled by temperature and current to emit laser light from 633 to 638 nm with a linewidth of 110 MHz. The laser beam is split into the probe beam (PB) and the burning beam (BB), which can

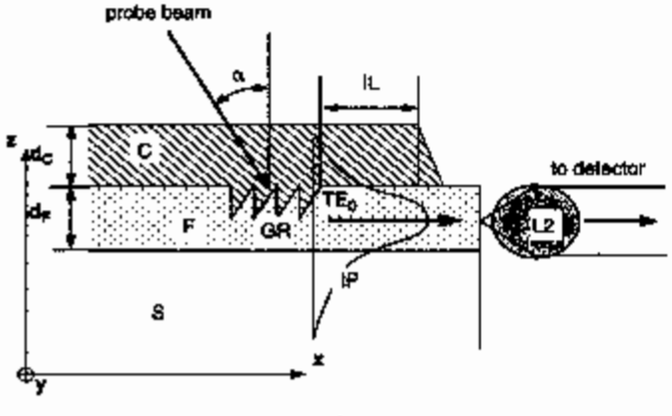

Fig. 1 Schematic of the waveguide. F, guiding layer with thickness $d_F \sim 160$ nm; GR, grating coupler; C, chlorin-doped PVB film of thickness $d_C \sim 120$ nm; S, glass substrate; IP, intensity profile of the TE0 mode; PB, probe beam (incoupling angle $\alpha = 5$ deg); L2, rod lens. The length of the polymer film in the direction of the propagating mode is IL = 7 mm.

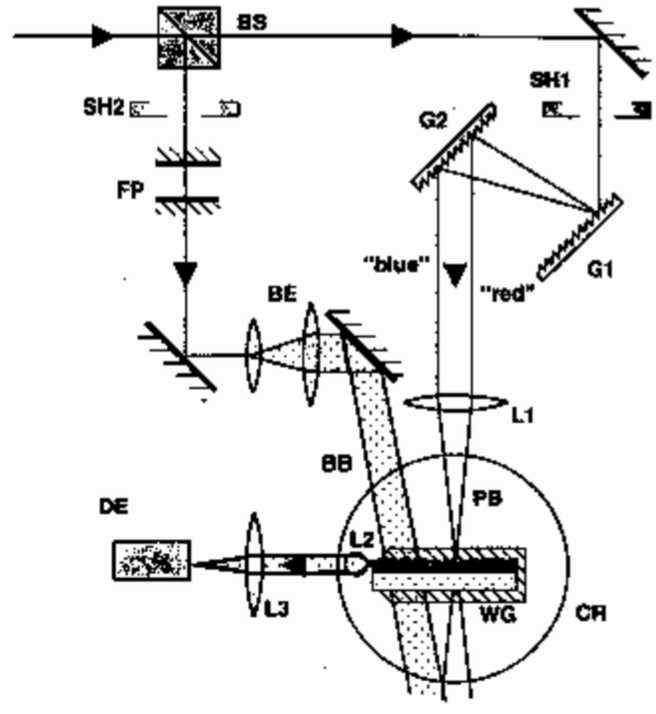

Fig. 2 Experimental setup. BS, beamsplitter; G1 and G2, diffraction gratings, BE, beam expander; L1 to L3, lenses; WG, waveguide inside the cryostat; CR, optical cryostat; FP, Fabry-Perot etalon (only used for time-domain experiments); PB, probe beam; BB, burning beam; DE, detector (photomultiplier or optical sampling oscilloscope); SH1 and SH2, shutters to open and close the probe and the burning beam.

be opened and closed alternately by shutters 1 (SH1) and 2 (SH2). The waveguide is fixed in a holder and is immersed in liquid helium at $T = 1.8$ K inside an optical cryostat. The expanded burning beam illuminates the waveguide from a nearly perpendicular direction through one of the cryostat windows. The probe beam is directed through a pair of diffraction gratings and is then focused to a 200-μm spot on the embossed grating. When we scan the frequency of the laser to measure the transmission of the waveguide, the incoupling direction of the probe beam has to vary because of the angular dispersion of the waveguide grating. The dispersion of the external gratings and the focal length of the focusing lens are chosen to compensate exactly for the angular dispersion of the waveguide grating, so that constant incoupling efficiency is maintained during the wavelength scan. The light transmitted through the waveguide is collimated by a small rod lens, which is positioned next to the output edge of the waveguide. A further lens (L3) outside of the cryostat focuses the transmitted light on the detector.

In the first experiment the laser is tuned to a wavelength of 635.1 nm, which is close to the center of the 9-nm-wide inhomogeneously broadened absorption band of the chlorin molecules. Shutter 2 is opened, and the transverse beam is applied to illuminate the waveguide for about 16 min with an intensity of 2 mW/cm^2. After the exposure, shutter 2 is closed and shutter 1 is opened, coupling the probe beam into the TE0 mode of the waveguide. An estimated power of 0.5 μW is coupled into the TE0 mode. The laser wavelength is scanned, and the intensity of the transmitted light is recorded with a photomultiplier. The transmission of the wave-

guide measured after the exposure is shown in Fig. 3. As a result of the illumination with the burn beam, a sharp maximum with a total width of 0.8 Å appears. When the frequency is tuned more than 1 Å away from the transmission peak, virtually no transmitted light originating from the guided mode is observed. In fact, most of the light still reaching the detector is due to the probe beam scattered in the substrate glass and collected subsequently by the rod lens.

The extinction ratio k of the filter, which we define as 10 times the logarithm of the ratio of the intensity measured at the center of the hole to the intensity at a wavelength shifted by 1 Å, is 18 dB. However, since the intensity measured near the transmission peak is only due to scattered light collected by the rod lens in the cryostat, we extrapolate our measured transmission curve with the transmission of a bulk sample of chlorin molecules in PVB of optical density 3.5 (dashed line in Fig. 3); this extrapolation increases k to 40 dB. Since many holes can be burned at any wavelength between 629 and 638 nm, one filter can have several transmission wavelengths, as shown in Fig. 4. With the extrapolated optical density of our filter, we approximate the concentration of chlorin in the PVB matrix to be 10^{-4} mol/l. It is known[11] that the critical concentration of chromophores in polymer hosts for energy migration effects that result in broadening of the ZPL is above 10^{-2} mol/l. The interaction length of the guided mode with the chlorin-doped polymer is 7 mm. With more concentrated polymer films on the waveguide, the actual size of our narrowband filter can be reduced to about 100 μm.

The width of the transmission line in Fig. 3 is exactly 2 times as large as the laser linewidth. Therefore the question remains: What is the narrowest possible linewidth of the filter? In order to determine this we use the technique of photochemically accumulated stimulated photon-echoes, as discussed in detail in Refs. 9 and 12, and measure the time decay of the echo signal. For this purpose we place a flat-mirror Fabry-Perot interferometer, with a free spectral range of 0.28 cm^{-1}, in the burning beam, as shown in Fig. 2. The light that is used for burning of the spectral holes consists of

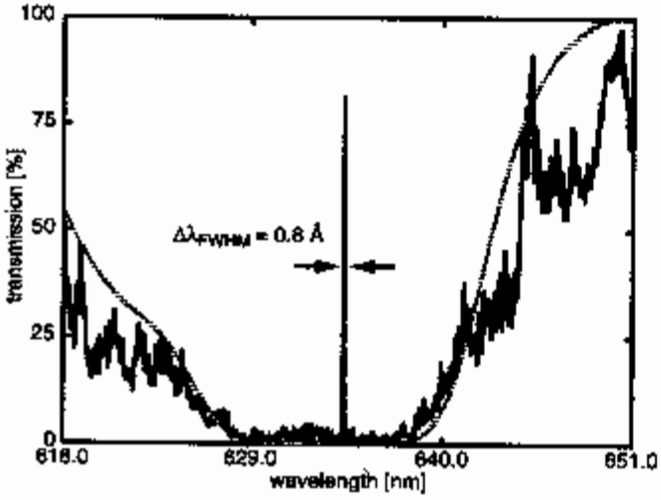

Fig. 3 Spectral transmission of the waveguide. Solid line: experimentally measured transmission after the burning exposure at the wavelength of 635 nm; dashed line: extrapolated transmission of a bulk sample with an optical density of 3.5. Here $\Delta\lambda_{FWHM} = 0.8$ Å.

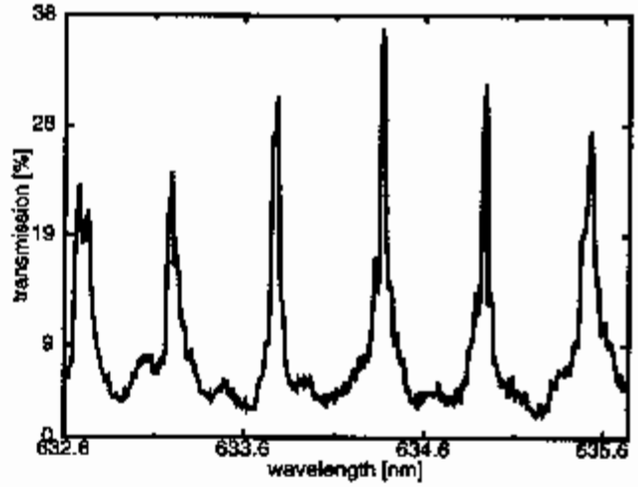

Fig. 4 Spectral transmission after transversal burning at several different wavelengths. The burning wavelengths were 632.7, 633.1, 633.8, 634.4, 635.0, and 635.5 nm. The linewidths of all the holes are of the order of 0.6 Å.

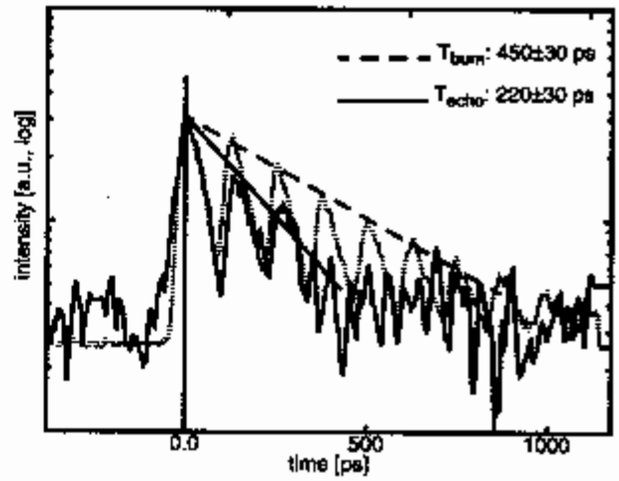

Fig. 5 Coherent time response of the waveguide to picosecond laser pulses. Solid line: echo signal obtained at the output of the waveguide after burning exposure using the Fabry-Perot etalon; dashed line: time-resolved intensity of the burning beam. $T_{burn} = 450 \pm 30$ ps, $T_{echo} = 220 \pm 30$ ps.

a sequence of narrow lines, separated by 0.28 cm^{-1}. In the time-domain picture, the hole burning is carried out at the 76-MHz repetition rate of the laser, using exponentially decaying pulse trains with a time spacing of 120 ps between the pulses (see Fig. 5). After a 10-min exposure with 4-mW/cm^2 intensity, the burning beam is blocked and the transmission of a probe beam consisting of a single pulse traveling through the waveguide is measured. If the ZPLs of the impurity molecules are much narrower than 0.1 Å, then the transmission of the waveguide should also contain many narrow holes with a 0.28-cm^{-1} spacing between them, and in the time domain the response should contain a train of echo pulses.

To measure the time dependence of the light emerging from the output edge of the waveguide, we use a Hamamatsu OOS-01/VIS optical sampling oscilloscope with a time resolution of 30 ps. The solid line in Fig. 5 shows the measured time response. By comparing the decay of the echo signal

pulse train with the decay of the original pulse train, we evaluate the upper limit of the width of the ZPL to be $\Gamma_{hom} \approx 200 \pm 50$ MHz. By comparing this value with the homogeneous linewidth[13] of chlorin in bulk samples, $\Gamma_{hom} \approx 160$ MHz at 1.7 K, we conclude that the partially restricted geometry of the polymer matrix prepared as a thin film does not significantly alter the interaction of the chromophore with phonons, and that the narrowest possible linewidth of the filter is in our case still well below 1 GHz.

To support this statement we replaced our picosecond dye laser by a narrowband cw diode laser with a laser linewidth of 110 MHz. The diode laser can be scanned continuously without mode jumps over a range of about 30 GHz. Since the angular dispersion of the waveguide grating in a frequency range of a few gigahertz can be neglected, we removed the gratings G1,2 and the lens L1 of the setup in Fig. 2. The principle of the experiment remains the same. We illuminate the waveguide transversely at a wavelength of 634.2 nm with an intensity of 33 $\mu W/cm^2$ for 11 min. After the exposure we block the burning beam and couple about 1 nW to the TE0 mode of the waveguide. Figure 6 shows the transmission of the waveguide device during a frequency scan of 10 GHz. A sharp transmission maximum arises at the burning frequency, with a linewidth of 580 MHz and a contrast of 9.1 dB. The shape of the hole is approximately Lorentzian.[13] The results shown in Fig. 6 were obtained with the same waveguide as in Fig. 3. However, the same contrast of the filter device was not obtained, possibly due to degradation of the chlorin molecules. The burning fluence and the readout intensity were significantly smaller in the experiments with the diode laser than with the picosecond dye laser, because of the narrower laser linewidth of the diode laser.

It should be noted that in our experiments the read beam also causes a photochemical bleaching of the SHB material in proportion to the amount of light absorbed by the chlorin molecules, which gradually destroys the filter. With the picosecond dye-laser configuration we estimate that 75 reading cycles reduce the contrast from 18 to 15 dB. With the diode-laser configuration 10 reading cycles reduce the contrast from 9.1 to 7.8 dB. To achieve nondestructive readout, SHB materials that undergo two-color (photon-gated) hole burning[4] should be used.

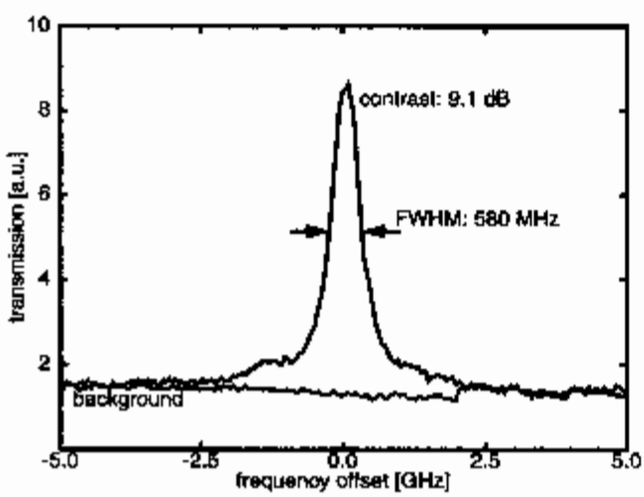

Fig. 6 Spectral transmission of the waveguide after transverse burning with a diode laser. Solid line: experimentally measured transmission after the burning exposure at the wavelength of 634.2 nm; shaded line: detection of scattered background radiation before hole burning.

Spectral hole-burning devices work best at liquid helium temperature. If one is willing to compromise the performance, operation at higher temperatures is feasible with increased linewidth. New materials for high-temperature SHB are under investigation.[14,15]

In conclusion, these experiments demonstrated that a planar waveguide covered with a thin polymer film containing SHB-active molecules at low temperature can act as a miniature programmable narrowband spectral filter. Such a filter has a high contrast and good frequency resolution, not obtainable with currently used techniques. The width of the spectral interval where the filter transmits light is limited by the width of the ZPL, and not by the geometrical dimensions of the device. In addition, we have shown that the linear coherent time response of the filter to picosecond pulses corresponds to its transmission spectral profile.

For frequency multiplexed optical data transmission and processing, the preferred operating wavelength region lies at 1.5 μm. It will be very important to extend the operation of our device into this wavelength region as well. However, very little is known about SHB systems absorbing at wavelengths larger than 700 to 800 nm. Another interesting possibility is to place the SHB material between electrodes and use the Stark effect to switch the transmission with the electric field. Such experiments have been performed earlier with bulk samples and relatively thick films.[5] In our case integration of miniature electrodes onto the waveguide is conceivable. These new aspects are the subject of our further investigations.

Acknowledgment

The authors are indebted to S. Altner for constructing a tunable diode laser source, as well as to B. Lambillotte for his excellent mechanical work. We also wish to thank ASI AG in Zurich for providing us with glass waveguides of high optical quality. This work was supported by the Swiss Priority Program for Optical Sciences, Applications, and Technologies.

References

1. H. A. Haus, and Y. Lai, "Narrow-band optical channel-dropping filter," *J. Lightwave Technol.* **10**(1), 57 (1992).
2. M. Levy, L. Eldada, R. Scarmozzino, R. M. Osgood, Jr., P. S. D. Lin, and F. Tong, "Fabrication of narrow-band channel-dropping filters," *IEEE Photon. Technol. Lett.* **4**, 1378 (1992).
3. K. Inoue, N. Takato, H. Toba, and M. Kawachi, "A four-channel optical waveguide multi/demultiplexer for 5-GHz spaced optical FDM transmission," *J. Lightwave Technol.* **6**(2), 339 (1988).
4. W. E. Moerner, Ed., *Persistent Spectral Hole-Burning: Science and Applications*, Springer-Verlag, Berlin (1988), and references therein.
5. F. A. Burkhalter, G. W. Suter, and U. P. Wild, "Hole Burning in the absorption spectrum of chlorin in polymer films: Stark effect and temperature dependence," *Chem. Phys. Lett.* **94**, 483 (1983).
6. B. Kohler, S. Bernet, A. Renn, and U. P. Wild, "Storage of 2000 holograms in a photochemical hole-burning system," *Opt. Lett.* **18**(24), 2144 (1993).
7. U. P. Wild, A. Renn, C. De Caro, and S. Bernet, "Spectral hole-burning and molecular computing," *Appl. Opt.* **29**, 4329 (1990).
8. N. Hartmannsgruber, U. Bogner, and M. Maier, "Electro-absorption light modulator based on persistent spectral hole burning in a light-guiding configuration," *J. Mol. Electron.* **5**, 193 (1989).
9. A. Rebane, R. Kaarli, P. Saari, A. Anijalg, and K. Timpmann, "Photochemical time-domain holography of weak picosecond pulses," *Opt. Commun.* **47**, 173 (1983).
10. H. Schwoerer, D. Erni, A. Rebane, and U. P. Wild, "Subpicosecond

pulse shaping via spectral hole-burning," *Opt. Commun.* **107**, 123 (1994).
11. H. Suzuki, E. Higurashi, A. Morinaka, T. Shimada, K. Sukegawa, and D. Haarer, "Persistent spectral hole burning in metal-free tetraphenylporphyrin doped polymethylmethacrylat core fiber," *J. Lumin.* **56**, 125 (1993).
12. D. A. Wiersma, "Coherent optical transient studies of dephasing and relaxation in electronic transitions of large molecules in the condensed phase," in *Advances in Chemical Physics XLII*, J. Jortner, R. D. Levine, S. A. Rice, Eds., p. 421, Wiley, New York (1981).
13. R. Locher, A. Renn, and U. P. Wild, "Hole-burning spectroscopy on organic molecules in amorphous silica," *Chem. Phys. Lett.* **138**, 405 (1987).
14. R. Jaaniso and H. Bill, "Room temperature persistent spectral hole burning in Sm-doped $SrFCl_{1/2}Br_{1/2}$ mixed crystals," *Europhys. Lett.* **16**(6), 569 (1991).
15. K. Holliday, C. Wei, M. Croci, and U. P. Wild, "Spectral hole-burning measurements of optical dephasing between 2–300 K in Sm^{2+} doped substitutionally disordered microcrystals," *J. Lumin.* **53**, 227 (1992).

Marcel Tschanz received his diploma in physics from the Swiss Federal Institute of Technology, Zürich (ETHZ), in 1991, specializing in optics and integrated optics. Since 1992 he has worked in the physical chemistry laboratory of the ETHZ on his PhD thesis; his main interests are integrated optics and spectroscopic and holographic techniques.

Aleksander Rebane studied physics at Tartu University and the Institute of Physics of the Academy of Sciences in Estonia, where he also received his PhD in 1985. After being employed as a research associate at the Estonian Academy of Sciences, he joined as a senior assistant in 1991 the Laboratory of Physical Chemistry of Swiss Federal Institute of Technology in Zürich. For his work on time- and space-domain holography Dr. A. Rebane received in 1993 the Prize of the International Commission of Optics. His interests include coherent and nonlinear optics, ultrashort lasers, and high-resolution spectroscopy of molecules in solids.

Urs P. Wild is a full professor of physical chemistry at the Swiss Federal Institute of Technology in Zürich. The focus of his research group is on photochemistry and photophysics of molecules in amorphous materials and crystals at low temperatures. His special research topics are spectral hole burning, molecular computing, photography, femtosecond spectroscopy, and single-molecule spectroscopy. Wild has published more than 200 papers.